# 多联泵 MULTIPLE PUMPS

## 如何订购/ HOW TO ORDER

| BH | P | 2/2/2 | 前盖 Front cover | 旋向 Rotation | 16/16/6 | 轴伸 Shaft | 油口 Ports | 油口位置 Ports position | 油封 Seals | 可选项 Options |
|---|---|---|---|---|---|---|---|---|---|---|
| 系列号 Series | P- 齿轮泵 Pump | 组别 Group | A0 | D 顺时针转 Clockwise | 规格 Size | | | | | |
| | | | B0 | S 逆时针转 Counter clockwise | 3 | | | | | |
| | | | B1 | R 可正反转 Reversible | 4 | | | | | |
| | | | B2 | | 6 | | | | | |
| | | | Q0 | | 8 | | | | | |
| | | | Q1 | | 10 | | | | | |
| | | | Q2 | | 12 | | | | | |
| | | | | | 14 | | | | | |
| | | | | | 16 | | | | | |
| | | | | | 18 | | | | | |
| | | | | | 20 | | | | | |
| | | | | | 22 | | | | | |
| | | | | | 25 | | | | | |
| | | | | | 28 | | | | | |
| | | | | | 30 | | | | | |

### 多联泵概述/MULTIPLE PUMPS COMBTNATION

Reduced inlets provide overall systems savings by reducing the cost of redundant inlet hose and fittings.

For other combinations please consult our sales department

### 油封

省略-温度范围在-10℃~+80℃,进油口最高绝对压力为3bar。
V-适用于高温介质，温度范围在-10℃~+120℃。
H-适用于低温介质，温度范围在-40℃~+80℃。
T-适用于进油口最大绝对压力3~6bar。
N-适用于进油口最大绝对压力3~10bar。

### Seals

Omit-Range between -10℃ and +80℃,inlet pressure up to max. 3 bar absolute.
V-Version suitable for fluid at hi-temperatures, range between -10℃ and +120℃.
H-Version suitable for fluid at low-temperatures, range between -40℃ and +80℃.
T-Version suitable for inlet pressure up to max. 3 and 6 bar absolute.
N-Version suitable for inlet pressure up to max. 3 and 10 bar absolute.

### 范例/ Examples:

BHP2/2/2-B0-D-16/16/6-T0-E0 = 顺时针转，第2组，前泵排量16cc/rev,中间泵排量16cc/rev,后泵排量6cc/rev, B0前盖，T0 1:8锥形轴伸，E0安装油口，标准油封
clockwise rotation, group 2, front pump 16 cc/rev, middle pump 16 cc/rev, rear pump 6 cc/rev, B0 front cover,
1:8 tapered shaft(T0), setting ports E0 type, standard seals

BHP2/2-B0-D-16/16-T0-E0 = 顺时针转，第2组，前泵排量16cc/rev,后泵排量16cc/rev, B0前盖，T0 1:8锥形轴伸，E0安装油口，标准油封
clockwise rotation, group 2, front pump 16 cc/rev, rear pump 16 cc/rev, B0 front cover,
1:8 tapered shaft(T0), setting ports E0 type, standard seals

BAP2/2-A0-D-25/16-C0-U0 = 顺时针转，第2组，前泵排量 25 cc/rev, 后泵排量 16 cc/rev, A0 前盖， C0 圆柱轴伸，U0 安装油口，标准油封
clockwise rotation, group 2, front pump 25 cc/rev, rear pump 16 cc/rev, A0 front cover, C0 parallel shaft,
setting ports U0 type, standard seals

## 如何订购/HOW TO ORDER

油口位置/Ports position

| | |
|---|---|
| 省略–侧进侧出 | Omit–Side inlet and side outlet |
| B–后进前出 | B–Back inlet and front outlet |
| C–后进侧出 | C–Back inlet and side outlet |
| D–侧进前出 | D–Side inlet and front outlet |
| R–后进后出 | R–Back inlet and back outlet |

油口形式/Standard version

| | |
|---|---|
| E–二进二出(不通油型) | E–two inlet and two outlet(separated type) |
| F–二进二出(通油型) | F–two inlet and two outlet(common type) |
| G–一进二出 | G–one inlet and two outlet |
| J–一进三出 | J–one inlet and three outlet |
| K–二进三出 | K–two inlet and three outlet |

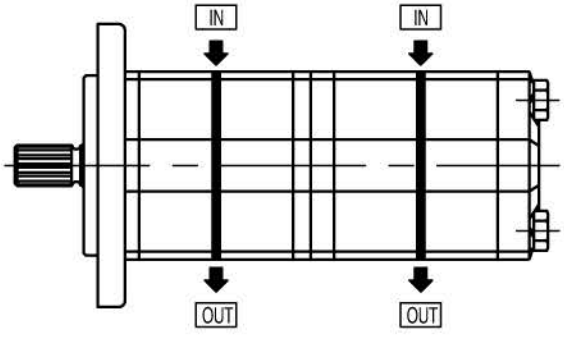


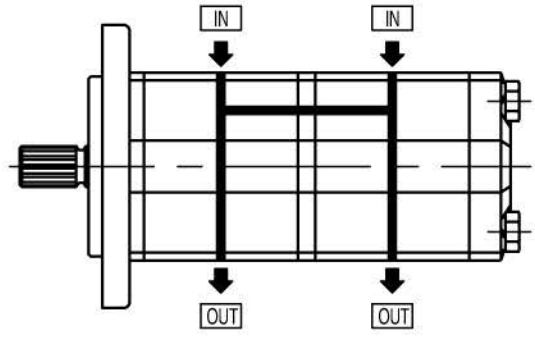


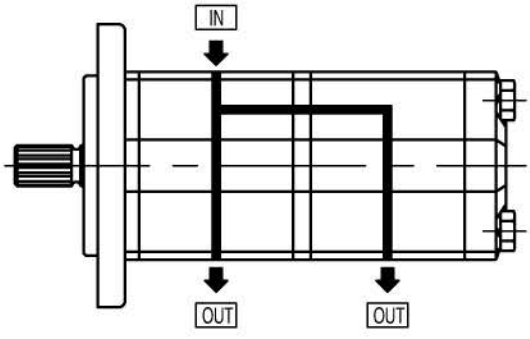


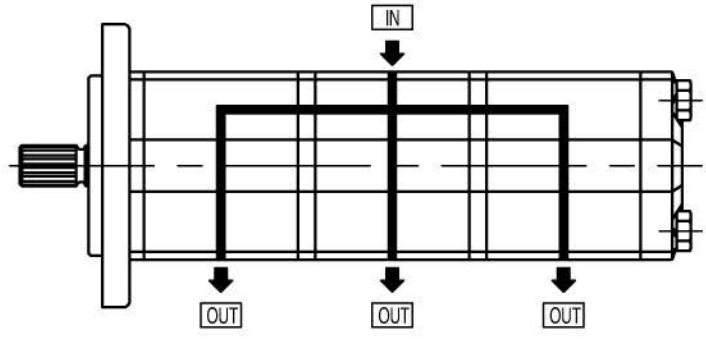


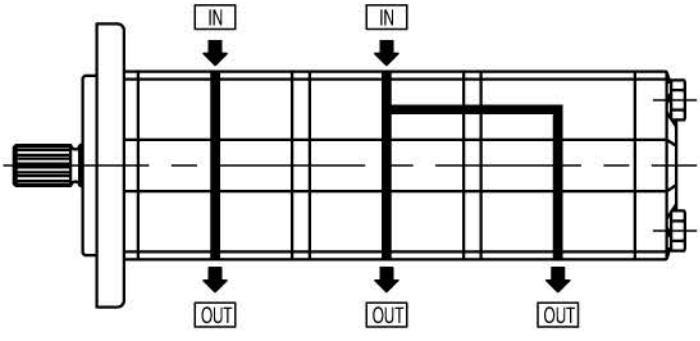

# BKP0.5/0.5

## BKP0.5/0.5–E

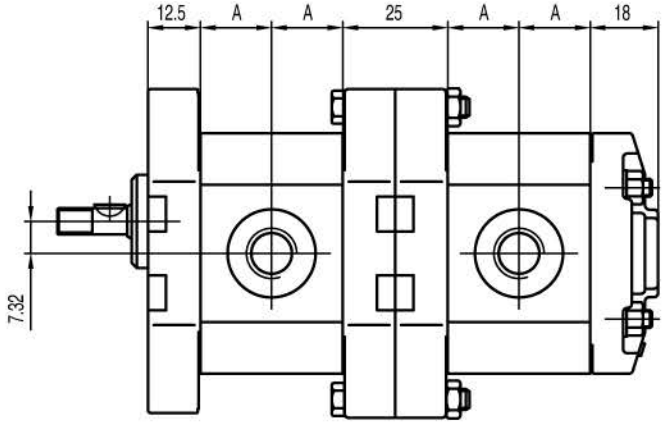


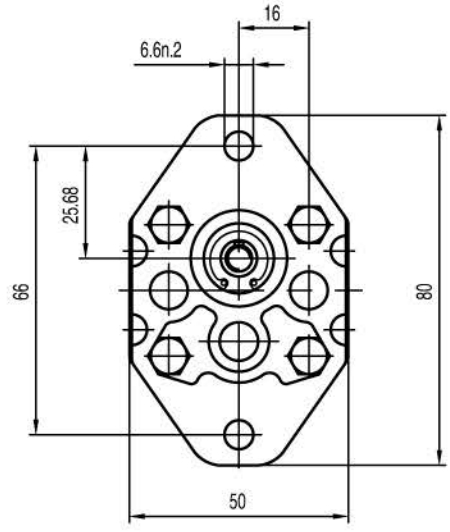


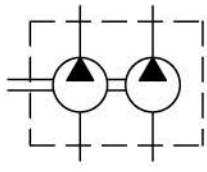

## BKP0.5

| 排量 Displacement | 最大压力 Max pressure | | | 最高转速 Max. speed | 最低转速 Min. speed | 尺寸 Dimensions |
|---|---|---|---|---|---|---|
| | P1 | P2 | P3 | | | A |
| ($cm^3$/rev) | bar | bar | bar | (r/min) | (r/min) | mm |
| 0.19 | 200 | 230 | 250 | 7000 | 1000 | 14.8 |
| 0.26 | 200 | 230 | 250 | 7000 | 1000 | 15 |
| 0.38 | 200 | 230 | 250 | 7000 | 1000 | 15.5 |
| 0.50 | 200 | 230 | 250 | 7000 | 1000 | 16 |
| 0.65 | 200 | 230 | 250 | 7000 | 1000 | 16.5 |
| 0.75 | 200 | 230 | 250 | 7000 | 1000 | 17 |
| 0.88 | 200 | 230 | 250 | 7000 | 1000 | 17.5 |
| 1.00 | 200 | 230 | 250 | 6000 | 850 | 18 |
| 1.25 | 200 | 230 | 250 | 5000 | 700 | 19 |
| 1.50 | 200 | 230 | 250 | 4000 | 600 | 20 |
| 1.75 | 180 | 210 | 230 | 4000 | 600 | 21 |
| 2.00 | 160 | 190 | 210 | 3000 | 500 | 22 |

# BHP1/1 BKP1/1

## BHP1/1-F

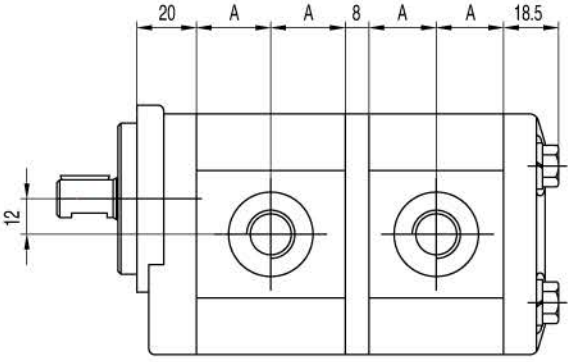


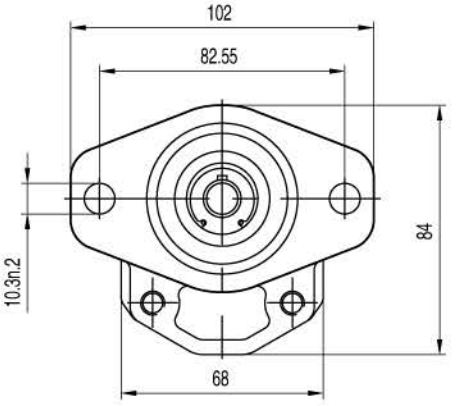


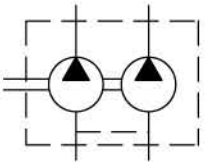

## BHP1/1-E

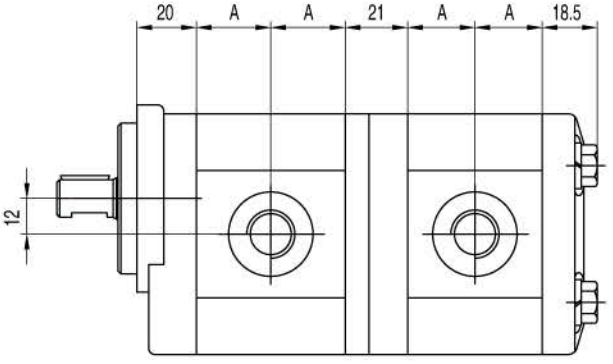


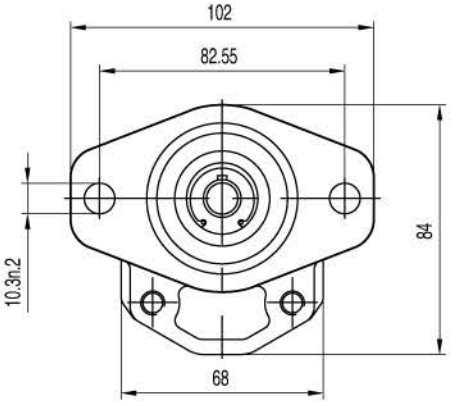


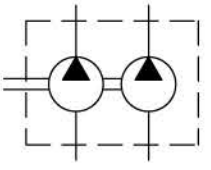

## BKP1/1-E

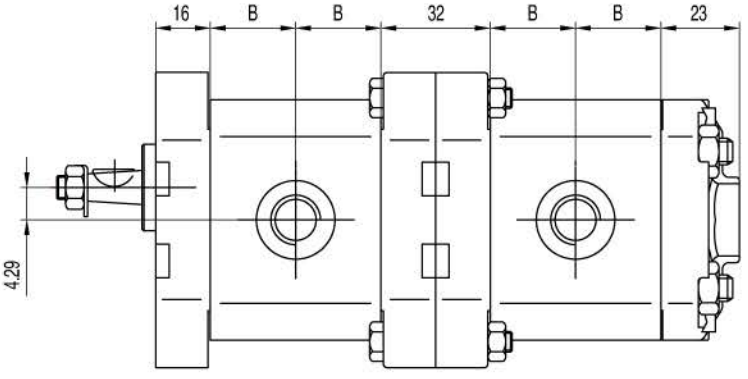


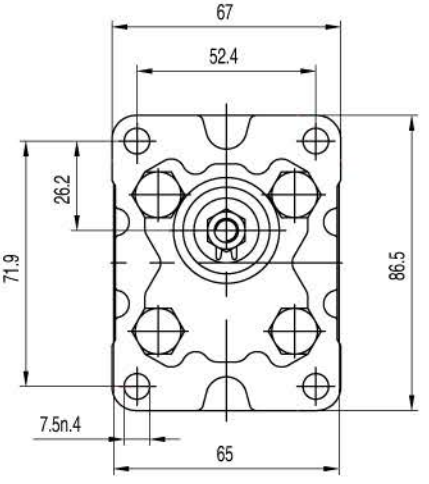


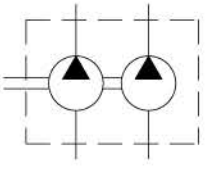

# BHP1/1 BKP1/1

## BHP1

| 排量 Displacement | 最大压力 Max pressure | | | 最高转速 Max. speed | 最低转速 Min. speed | 尺寸 Dimensions |
|---|---|---|---|---|---|---|
| | P1 | P2 | P3 | | | A |
| ($cm^3$/rev) | bar | bar | bar | (r/min) | (r/min) | mm |
| 1.4 | 250 | 270 | 290 | 6000 | 800 | 22 |
| 2.1 | 250 | 270 | 290 | 6000 | 800 | 23 |
| 2.8 | 250 | 270 | 290 | 5000 | 800 | 24 |
| 3.5 | 250 | 270 | 290 | 5000 | 800 | 25 |
| 4.1 | 250 | 270 | 290 | 4000 | 800 | 26 |
| 5.2 | 230 | 245 | 260 | 4000 | 800 | 27.5 |
| 6.2 | 230 | 245 | 260 | 3500 | 800 | 29 |
| 7.6 | 200 | 215 | 230 | 3000 | 600 | 31 |
| 9.3 | 180 | 195 | 210 | 2500 | 600 | 33.5 |
| 11.0 | 170 | 185 | 200 | 2500 | 600 | 36 |
| 13.8 | 150 | 165 | 180 | 2000 | 600 | 40 |

## BKP1

| 排量 Displacement | 最大压力 Max pressure | | | 最高转速 Max. speed | 最低转速 Min. speed | 尺寸 Dimensions |
|---|---|---|---|---|---|---|
| | P1 | P2 | P3 | | | B |
| ($cm^3$/rev) | bar | bar | bar | (r/min) | (r/min) | mm |
| 0.8 | 230 | 250 | 270 | 6000 | 1000 | 17.8 |
| 1.1 | 230 | 250 | 270 | 6000 | 1000 | 18 |
| 1.3 | 230 | 250 | 270 | 6000 | 1000 | 18.5 |
| 1.6 | 230 | 250 | 270 | 6000 | 1000 | 19 |
| 1.8 | 230 | 250 | 270 | 6000 | 1000 | 19.5 |
| 2.1 | 230 | 250 | 270 | 6000 | 1000 | 20 |
| 2.7 | 230 | 250 | 270 | 6000 | 800 | 21 |
| 3.2 | 210 | 230 | 250 | 5000 | 800 | 22 |
| 3.7 | 210 | 230 | 250 | 4500 | 800 | 23 |
| 4.2 | 210 | 230 | 250 | 4000 | 800 | 24 |
| 4.8 | 190 | 210 | 230 | 3500 | 600 | 25 |
| 5.8 | 190 | 210 | 230 | 3000 | 600 | 27 |
| 7.0 | 160 | 180 | 200 | 2500 | 600 | 29 |
| 8.0 | 160 | 180 | 200 | 2100 | 600 | 31 |

# BHP2/2/2 BHP2/2 BHP2/1 BHP2/0.5

## BHP2/2-Fa BHP2/2-G

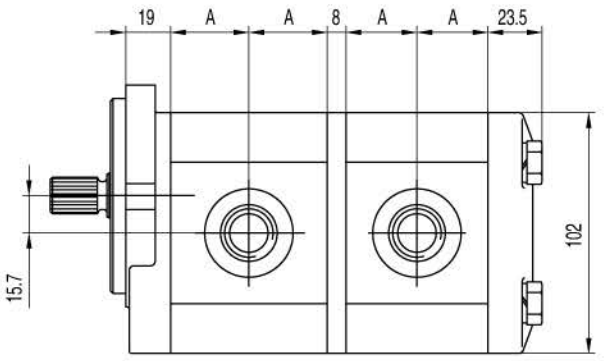


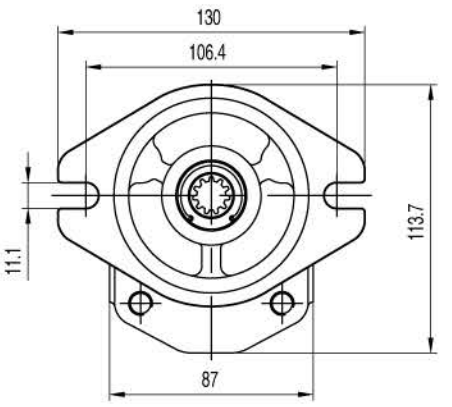


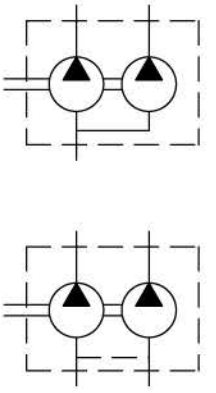

## BHP2/2-E

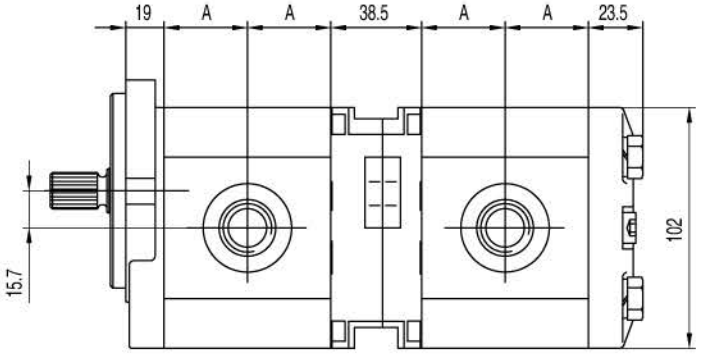


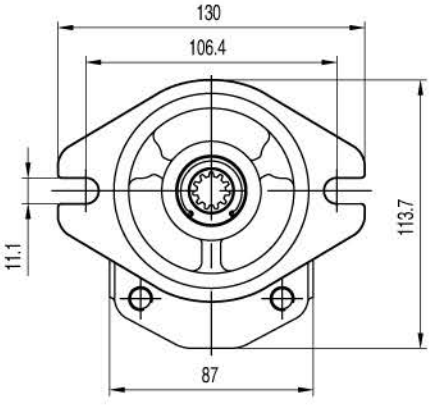


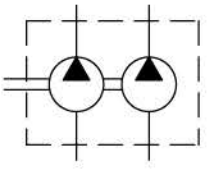

## BHP2/2/2-Ea BHP2/2/2-Fb

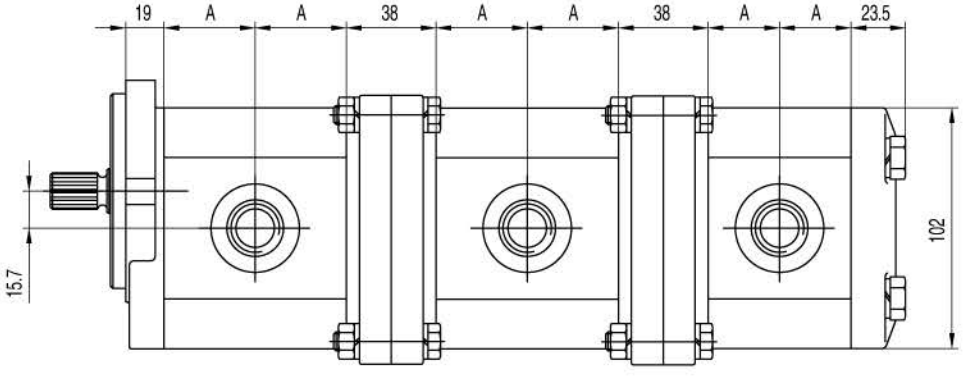


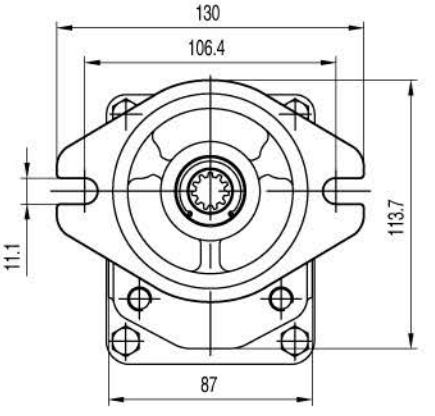


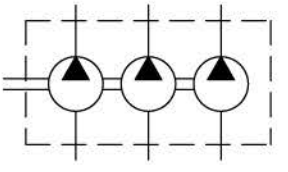

# BHP2/2/2 BHP2/2 BHP2/1 BHP2/0.5

## BHP2/2-Fa BHP2/2-G

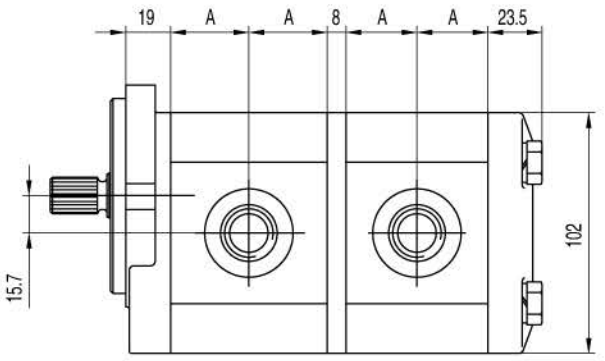


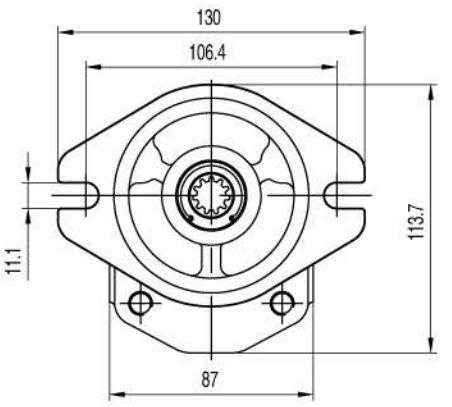


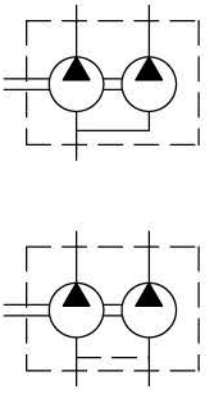

## BHP2/2-E

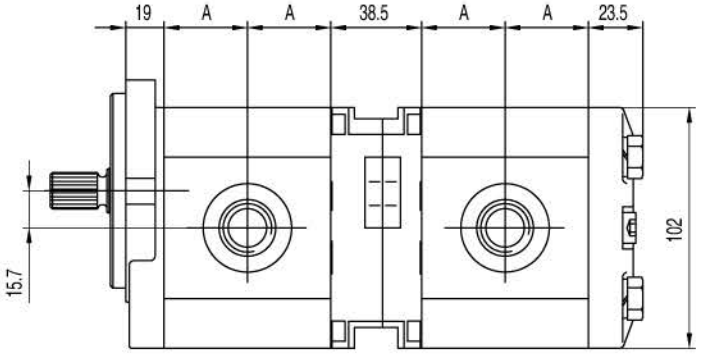


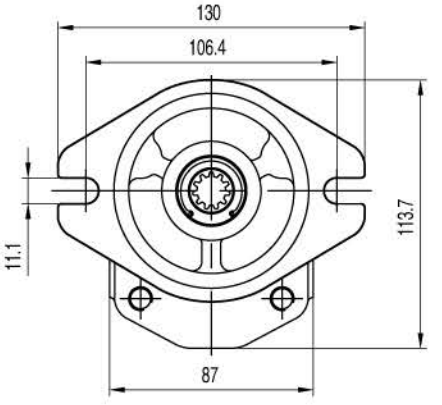


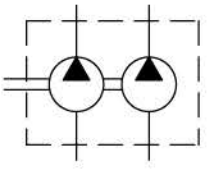

## BHP2/2/2-Ea BHP2/2/2-Fb

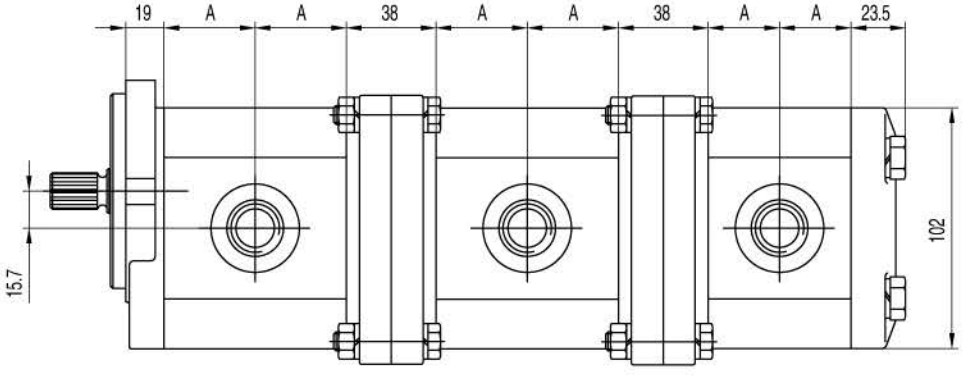


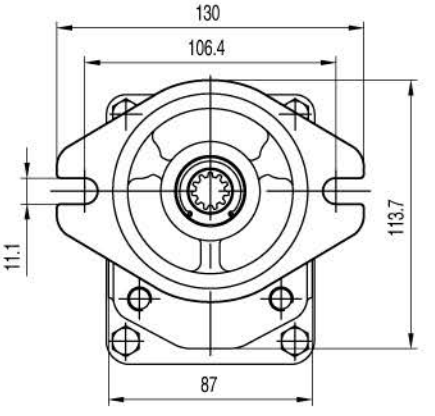


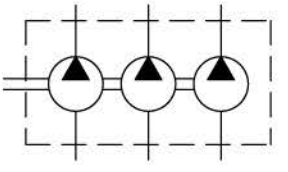

# BHP2/2/2 BHP2/2 BHP2/1 BHP2/0.5

## BHP2

| 排量 Displacement | 最大压力 Max pressure | | | 最高转速 Max. speed | 最低转速 Min. speed | 尺寸 Dimensions |
|---|---|---|---|---|---|---|
| | P1 | P2 | P3 | | | A |
| ($cm^3$/rev) | bar | bar | bar | (r/min) | (r/min) | mm |
| 3 | 270 | 285 | 300 | 4000 | 800 | 24.5 |
| 4 | 270 | 285 | 300 | 4000 | 600 | 25.3 |
| 6 | 270 | 285 | 300 | 4000 | 600 | 27 |
| 8 | 270 | 285 | 300 | 3500 | 500 | 28.6 |
| 10 | 270 | 285 | 300 | 3000 | 500 | 30.3 |
| 12 | 270 | 285 | 300 | 3000 | 500 | 32 |
| 14 | 250 | 265 | 280 | 4000 | 500 | 33.6 |
| 16 | 250 | 265 | 280 | 4000 | 500 | 35.3 |
| 18 | 250 | 265 | 280 | 3600 | 400 | 37 |
| 20 | 220 | 235 | 250 | 3200 | 400 | 38.6 |
| 22 | 220 | 235 | 250 | 3000 | 400 | 40.3 |
| 25 | 200 | 215 | 230 | 3000 | 400 | 42.8 |
| 28 | 180 | 190 | 200 | 2500 | 400 | 45.3 |
| 30 | 160 | 170 | 180 | 2500 | 400 | 47 |

## BKP0.5

| 排量 Displacement | 最大压力 Max pressure | | | 最高转速 Max. speed | 最低转速 Min. speed | 尺寸 Dimensions |
|---|---|---|---|---|---|---|
| | P1 | P2 | P3 | | | B |
| ($cm^3$/rev) | bar | bar | bar | (r/min) | (r/min) | mm |
| 0.19 | 200 | 230 | 250 | 7000 | 1000 | 14.8 |
| 0.26 | 200 | 230 | 250 | 7000 | 1000 | 15 |
| 0.38 | 200 | 230 | 250 | 7000 | 1000 | 15.5 |
| 0.50 | 200 | 230 | 250 | 7000 | 1000 | 16 |
| 0.65 | 200 | 230 | 250 | 7000 | 1000 | 16.5 |
| 0.75 | 200 | 230 | 250 | 7000 | 1000 | 17 |
| 0.88 | 200 | 230 | 250 | 7000 | 1000 | 17.5 |
| 1.00 | 200 | 230 | 250 | 6000 | 850 | 18 |
| 1.25 | 200 | 230 | 250 | 5000 | 700 | 19 |
| 1.50 | 200 | 230 | 250 | 4000 | 600 | 20 |
| 1.75 | 180 | 210 | 230 | 4000 | 600 | 21 |
| 2.00 | 160 | 190 | 210 | 3000 | 500 | 22 |

# BHP2/2/2 BHP2/2 BHP2/1 BHP2/0.5

## BAP1

| 排量 Displacement | 最大压力 Max pressure | | | 最高转速 Max. speed | 最低转速 Min. speed | 尺寸 Dimensions |
|---|---|---|---|---|---|---|
| | P1 | P2 | P3 | | | C |
| ($cm^3$/rev) | bar | bar | bar | (r/min) | (r/min) | mm |
| 1.4 | 250 | 270 | 290 | 6000 | 800 | 22 |
| 2.1 | 250 | 270 | 290 | 6000 | 800 | 23 |
| 2.8 | 250 | 270 | 290 | 5000 | 800 | 24 |
| 3.5 | 250 | 270 | 290 | 5000 | 800 | 25 |
| 4.1 | 250 | 270 | 290 | 4000 | 800 | 26 |
| 5.2 | 230 | 245 | 260 | 4000 | 800 | 27.5 |
| 6.2 | 230 | 245 | 260 | 3500 | 800 | 29 |
| 7.6 | 200 | 215 | 230 | 3000 | 600 | 31 |
| 9.3 | 180 | 195 | 210 | 2500 | 600 | 33.5 |
| 11.0 | 170 | 185 | 200 | 2500 | 600 | 36 |
| 13.8 | 150 | 165 | 180 | 2000 | 600 | 40 |

## BKP1

| 排量 Displacement | 最大压力 Max pressure | | | 最高转速 Max. speed | 最低转速 Min. speed | 尺寸 Dimensions |
|---|---|---|---|---|---|---|
| | P1 | P2 | P3 | | | D |
| ($cm^3$/rev) | bar | bar | bar | (r/min) | (r/min) | mm |
| 0.8 | 230 | 250 | 270 | 6000 | 1000 | 17.8 |
| 1.1 | 230 | 250 | 270 | 6000 | 1000 | 18 |
| 1.3 | 230 | 250 | 270 | 6000 | 1000 | 18.5 |
| 1.6 | 230 | 250 | 270 | 6000 | 1000 | 19 |
| 1.8 | 230 | 250 | 270 | 6000 | 1000 | 19.5 |
| 2.1 | 230 | 250 | 270 | 6000 | 1000 | 20 |
| 2.7 | 230 | 250 | 270 | 6000 | 800 | 21 |
| 3.2 | 210 | 230 | 250 | 5000 | 800 | 22 |
| 3.7 | 210 | 230 | 250 | 4500 | 800 | 23 |
| 4.2 | 210 | 230 | 250 | 4000 | 800 | 24 |
| 4.8 | 190 | 210 | 230 | 3500 | 600 | 25 |
| 5.8 | 190 | 210 | 230 | 3000 | 600 | 27 |
| 7.0 | 160 | 180 | 200 | 2500 | 600 | 29 |
| 8.0 | 160 | 180 | 200 | 2100 | 600 | 31 |

# BHP2.6/2.6

## BHP2.6/2.6–F

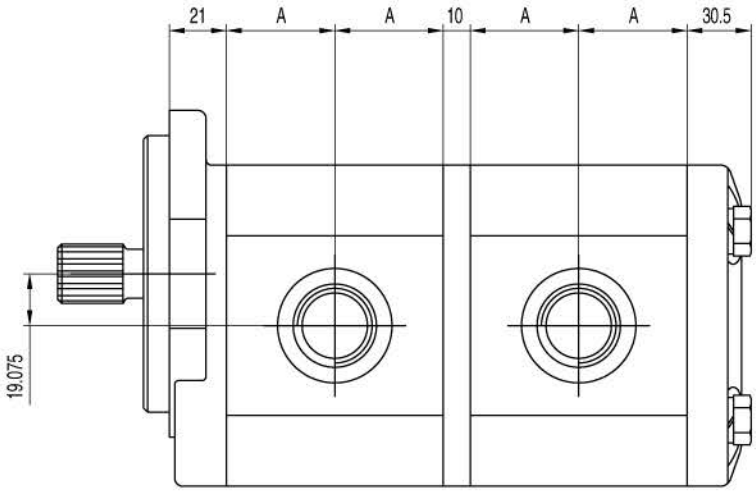


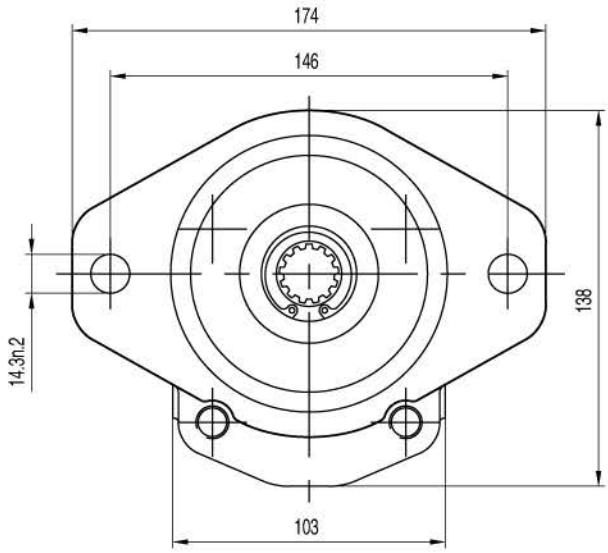


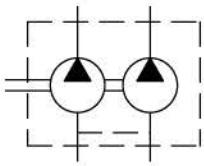

## BHP2.6

| 排量 Displacement | 最大压力 Max pressure | | | 最高转速 Max. speed | 最低转速 Min. speed | 尺寸 Dimensions |
|---|---|---|---|---|---|---|
| | P1 | P2 | P3 | | | A |
| ($cm^3$/rev) | bar | bar | bar | (r/min) | (r/min) | mm |
| 6 | 250 | 280 | 300 | 4000 | 800 | 28.3 |
| 8 | 250 | 280 | 300 | 4000 | 800 | 29.3 |
| 10 | 250 | 280 | 300 | 4000 | 700 | 30.3 |
| 12 | 250 | 280 | 300 | 3500 | 700 | 31.5 |
| 14 | 250 | 280 | 300 | 3500 | 600 | 32.3 |
| 16 | 250 | 280 | 300 | 3500 | 600 | 33.5 |
| 19 | 250 | 280 | 300 | 3000 | 500 | 35.3 |
| 22 | 250 | 280 | 300 | 3000 | 500 | 37 |
| 25 | 250 | 280 | 300 | 3000 | 500 | 38.3 |
| 28 | 250 | 280 | 300 | 3000 | 500 | 39.8 |
| 30 | 230 | 250 | 260 | 3000 | 500 | 41 |
| 32 | 230 | 250 | 260 | 3000 | 400 | 42.3 |
| 36 | 200 | 230 | 250 | 2750 | 400 | 44.3 |
| 38 | 200 | 230 | 250 | 2750 | 400 | 45.3 |
| 40 | 170 | 190 | 210 | 2500 | 400 | 46.3 |
| 44 | 170 | 190 | 210 | 2500 | 400 | 48.5 |

# BHP3/3 BHP3/2 BHP3/1 BHP3/0.5

## BHP3/3-E BHP3/3-F

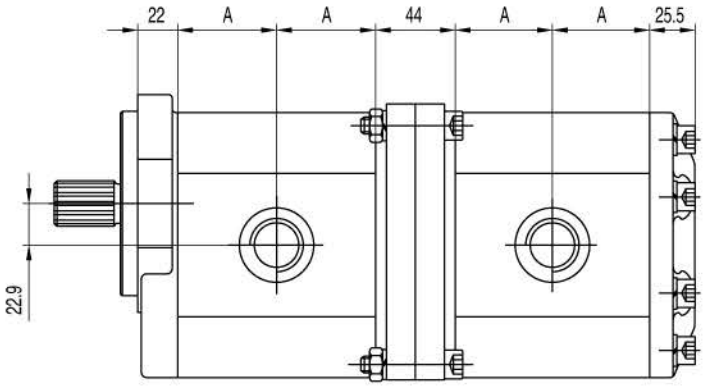


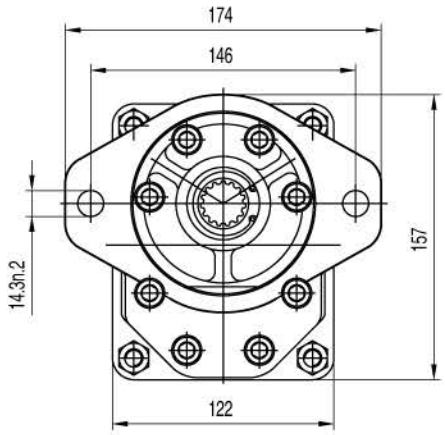


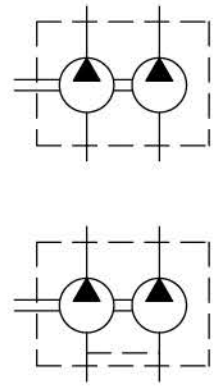

## BHP3/3-G

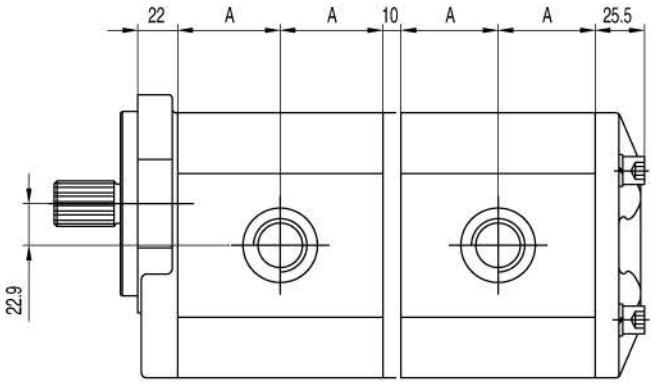


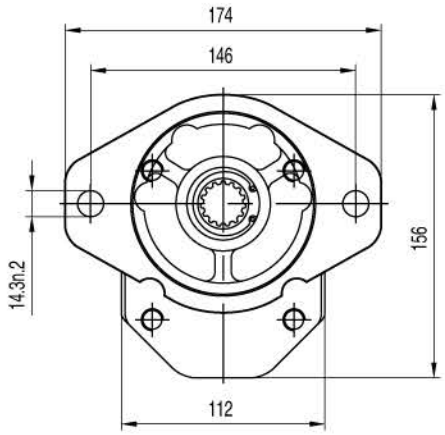


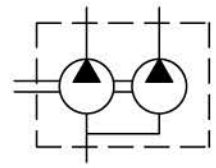

## BHP3/2-E BHP3/2-F

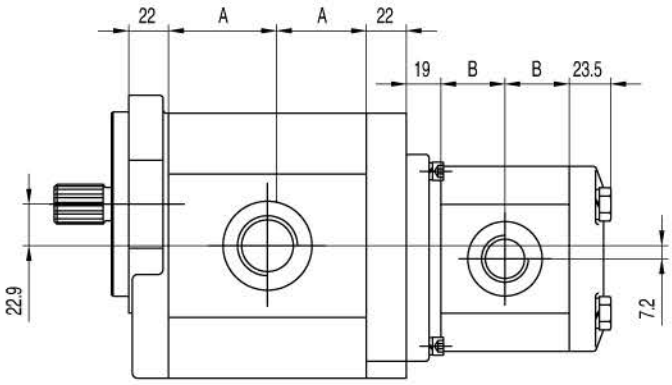


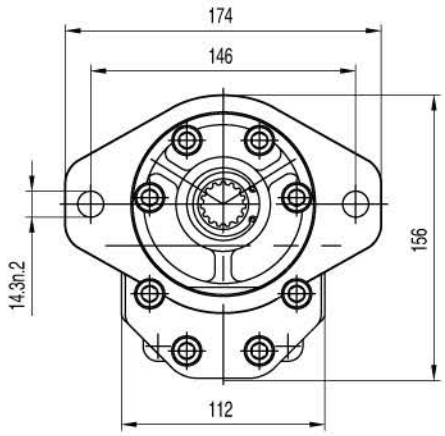


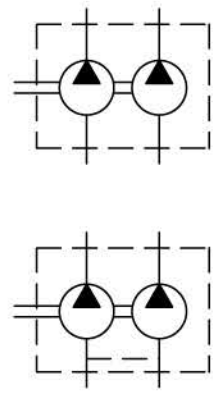

# BHP3/3 BHP3/2 BHP3/1 BHP3/0.5

## BHP3/1-Ec

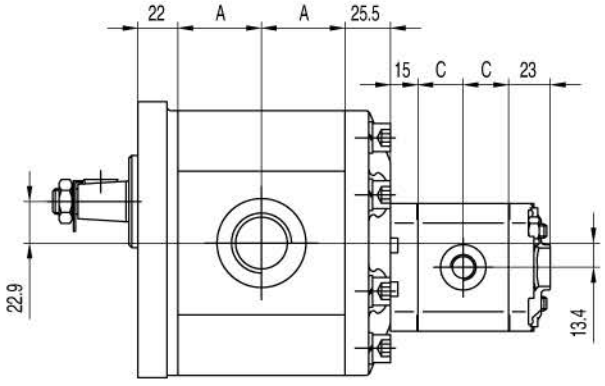


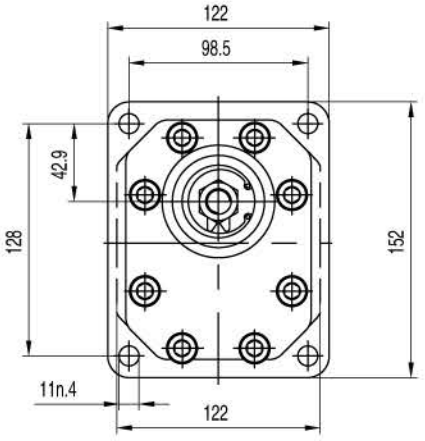


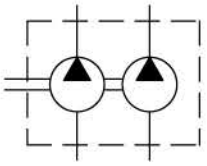

## BHP3/1-Eb

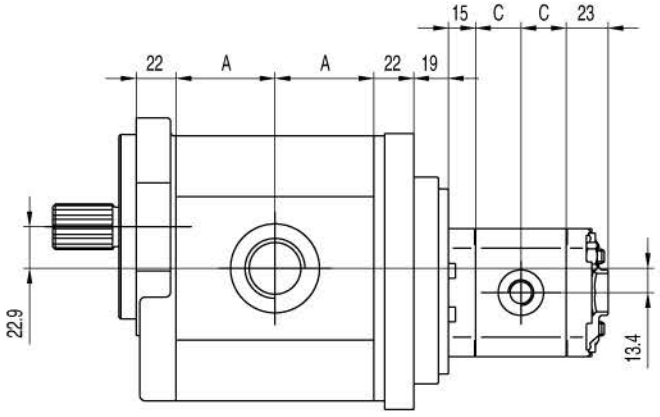


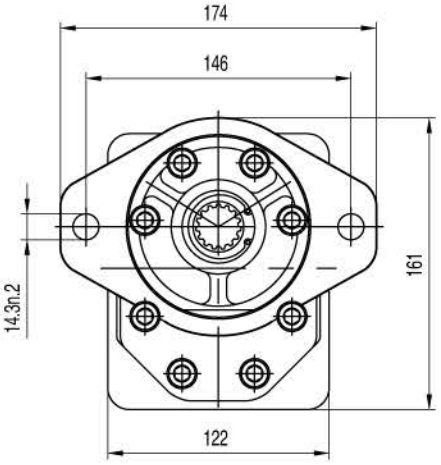


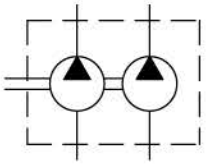

## BHP3/0.5-Ea

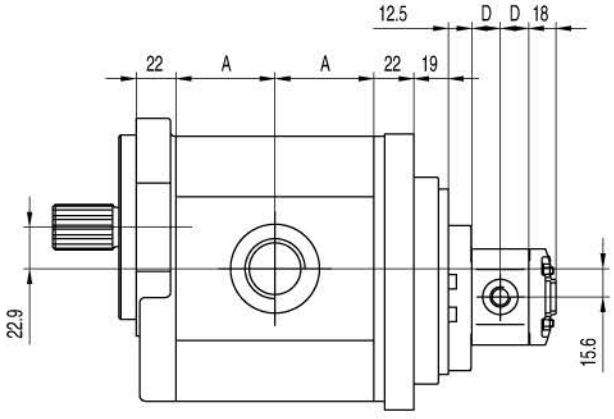


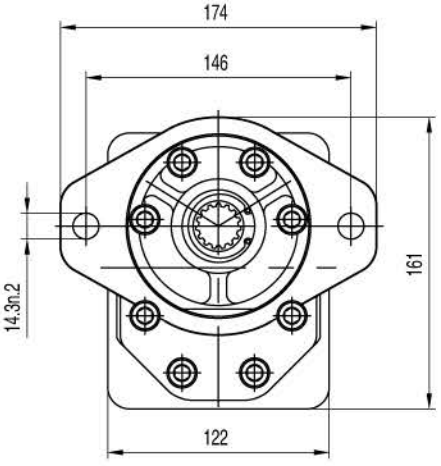


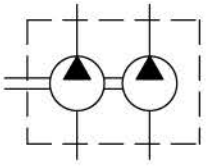

# BHP3/3 BHP3/2 BHP3/1 BHP3/0.5

## BHP3

| 排量 Displacement | 最大压力 Max pressure | | | 最高转速 Max. speed | 最低转速 Min. speed | 尺寸 Dimensions |
|---|---|---|---|---|---|---|
| | P1 | P2 | P3 | | | A |
| ($cm^3$/rev) | bar | bar | bar | (r/min) | (r/min) | mm |
| 20 | 250 | 265 | 280 | 3500 | 600 | 40.5 |
| 22 | 250 | 265 | 280 | 3500 | 600 | 41.5 |
| 26 | 250 | 265 | 280 | 3000 | 600 | 43 |
| 33 | 230 | 250 | 270 | 3000 | 500 | 46 |
| 39 | 230 | 250 | 270 | 3000 | 500 | 49.5 |
| 46 | 230 | 250 | 270 | 3000 | 500 | 52.5 |
| 50 | 220 | 240 | 260 | 3000 | 500 | 54.5 |
| 52 | 220 | 240 | 260 | 3000 | 500 | 55.5 |
| 55 | 200 | 230 | 250 | 2800 | 400 | 56.5 |
| 63 | 200 | 230 | 250 | 2800 | 400 | 60.5 |
| 71 | 180 | 200 | 220 | 2500 | 400 | 64 |

## BHP2

| 排量 Displacement | 最大压力 Max pressure | | | 最高转速 Max. speed | 最低转速 Min. speed | 尺寸 Dimensions |
|---|---|---|---|---|---|---|
| | P1 | P2 | P3 | | | B |
| ($cm^3$/rev) | bar | bar | bar | (r/min) | (r/min) | mm |
| 3 | 270 | 285 | 300 | 4000 | 800 | 24.5 |
| 4 | 270 | 285 | 300 | 4000 | 600 | 25.3 |
| 6 | 270 | 285 | 300 | 4000 | 600 | 27 |
| 8 | 270 | 285 | 300 | 3500 | 500 | 28.6 |
| 10 | 270 | 285 | 300 | 3000 | 500 | 30.3 |
| 12 | 270 | 285 | 300 | 3000 | 500 | 32 |
| 14 | 250 | 265 | 280 | 4000 | 500 | 33.6 |
| 16 | 250 | 265 | 280 | 4000 | 500 | 35.3 |
| 18 | 250 | 265 | 280 | 3600 | 400 | 37 |
| 20 | 220 | 235 | 250 | 3200 | 400 | 38.6 |
| 22 | 220 | 235 | 250 | 3000 | 400 | 40.3 |
| 25 | 200 | 215 | 230 | 3000 | 400 | 42.8 |
| 28 | 180 | 190 | 200 | 2500 | 400 | 45.3 |
| 30 | 160 | 170 | 180 | 2500 | 400 | 47 |

# BHP3/3 BHP3/2 BHP3/1 BHP3/0.5

## BKP1

| 排量 Displacement | 最大压力 Max pressure | | | 最高转速 Max. speed | 最低转速 Min. speed | 尺寸 Dimensions |
|---|---|---|---|---|---|---|
| | P1 | P2 | P3 | | | C |
| ($cm^3$/rev) | bar | bar | bar | (r/min) | (r/min) | mm |
| 0.8 | 230 | 250 | 270 | 6000 | 1000 | 17.8 |
| 1.1 | 230 | 250 | 270 | 6000 | 1000 | 18 |
| 1.3 | 230 | 250 | 270 | 6000 | 1000 | 18.5 |
| 1.6 | 230 | 250 | 270 | 6000 | 1000 | 19 |
| 1.8 | 230 | 250 | 270 | 6000 | 1000 | 19.5 |
| 2.1 | 230 | 250 | 270 | 6000 | 1000 | 20 |
| 2.7 | 230 | 250 | 270 | 6000 | 800 | 21 |
| 3.2 | 210 | 230 | 250 | 5000 | 800 | 22 |
| 3.7 | 210 | 230 | 250 | 4500 | 800 | 23 |
| 4.2 | 210 | 230 | 250 | 4000 | 800 | 24 |
| 4.8 | 190 | 210 | 230 | 3500 | 600 | 25 |
| 5.8 | 190 | 210 | 230 | 3000 | 600 | 27 |
| 7.0 | 160 | 180 | 200 | 2500 | 600 | 29 |
| 8.0 | 160 | 180 | 200 | 2100 | 600 | 31 |

## BKP0.5

| 排量 Displacement | 最大压力 Max pressure | | | 最高转速 Max. speed | 最低转速 Min. speed | 尺寸 Dimensions |
|---|---|---|---|---|---|---|
| | P1 | P2 | P3 | | | D |
| ($cm^3$/rev) | bar | bar | bar | (r/min) | (r/min) | mm |
| 0.19 | 200 | 230 | 250 | 7000 | 1000 | 14.8 |
| 0.26 | 200 | 230 | 250 | 7000 | 1000 | 15 |
| 0.38 | 200 | 230 | 250 | 7000 | 1000 | 15.5 |
| 0.50 | 200 | 230 | 250 | 7000 | 1000 | 16 |
| 0.65 | 200 | 230 | 250 | 7000 | 1000 | 16.5 |
| 0.75 | 200 | 230 | 250 | 7000 | 1000 | 17 |
| 0.88 | 200 | 230 | 250 | 7000 | 1000 | 17.5 |
| 1.00 | 200 | 230 | 250 | 6000 | 850 | 18 |
| 1.25 | 200 | 230 | 250 | 5000 | 700 | 19 |
| 1.50 | 200 | 230 | 250 | 4000 | 600 | 20 |
| 1.75 | 180 | 210 | 230 | 4000 | 600 | 21 |
| 2.00 | 160 | 190 | 210 | 3000 | 500 | 22 |